Combined Cutter/Vegetable slicer Combined vegetable slicer/cutter 7l/7.4qt, variab.speed-1500w, nema 5-15p

ITEM #

MODEL #

NAME #

SIS #

AIA #



602243 (DTRK70)

Combined Vegetable Slicer/Cutter Mixer angled front, continuous feed design, variable speed (300-3700 RPM), large single feed hopper, includes 7.4 qt stainless steel bowl.

Short Form Specification

Item No.

Vegetable Cutter/Mixer, angled front, continuous feed design, variable speed (300-3700 RPM), large single feed hopper, includes 7L/7.4QT stainless steel bowl, lid, bowl scraper, microtooth blade rotor, handle pusher, standard ejector, stainless steel feeding arm & hopper, aluminum motor housing, 1-1/3 HP, (discs NOT included)

APPROVAL:

Main Features

- 3 in 1 machine: cutter, emulsifier and vegetable slicer to slice, grate, liquidise, mix and mince in a matter of seconds.
- Incly system to incline motor base at 20° to better fit the vegetable slicer attachment.
- Long vegetables round hopper integrated in the feed arm, 3/4 moon roundish hopper to limit pre-cutting operations.
- Emulsifier function (scraper) included as standard.
- All parts in contact with food are removable without the use of tools, completely dismountable and dishwasher safe.
- Automatic restart of the machine with the 3/4 moon shaped pusher in position.
- Delivered with: 7.4qt (7lt) stainless steel cutter bowl, transparent lid, scraper and microtoothed blade rotor.
- Complete and wide selection of blades and grids available, Diameter of blades and grids are 8" (205mm).
- Vegetable slicer unit has slicing, grating, shredding (julienne) as well as dicing and french fries capabilities.
- Magnetic safety system and motor brake. Prevents machine from running when vegetable preparation lever and/or hopper are lifted or when cutter lid is not properly closed.
- Pulse function to coarse chopping.
- Automatic speed limitation according to the selected function (slicer or cutter).
- Base fixed cover for a better handling.

Construction

- Improved ventilation system to manage smoothly heavy duty use.
- Improved incly system for better stability.
- Improved fixing of long vegetable hopper pusher.
- Power: 1.3 HP.
- Vegetable cutting at 4 speeds up to 800 rpm. Food precessing at 10 variable speeds: 300-3700 rpm.
- TRK70 - 1.5 kW.
- Compact and portable design.
- Stainless steel bowl has a high chimney to ensure high productivity also when processing liquids (75% of the nominal capacity).

Combined Cutter/Vegetable slicer Combined vegetable slicer/cutter 7l/7.4qt, variab.speed-1500w, nema 5-15p

Combined Cutter/Vegetable slicer
Combined vegetable slicer/cutter
7l/7.4qt, variab.speed-1500w, nema 5-15p

Included Accessories

- 1 of Lid and bowl scraper for 7.4 qts (7 L) cutter mixer — PNC 650104
- 1 of Stainless steel bowl for 7.4 qts (7 L) cutter mixer — PNC 653593
- 1 of Ejector disc — PNC 653772
- 1 of Microtoothed blade rotor for 7 lt cutter mixer — PNC 653874

Optional Accessories

- Stainless steel shredding disc with S-blades 5/32" x 5/32" (4x4 mm) — PNC 650077 ❑
- Stainless steel shredding disc with S-blades 1/4"x 1/4" (6x6 mm) (can also be used for French fries) — PNC 650078 ❑
- Stainless steel shredding disc with S-blades 5/16" x 5/16" (8x8 mm) (can also be used for French fries) — PNC 650079 ❑
- Stainless steel shredding disc with S-blades 3/8" x 3/8' (10x10 mm) (can also be used for French fries) — PNC 650080 ❑
- Stainless steel pressing/slicing disc with corrugated S-blades 5/64" (2 mm) (can be used for slicing or combined with grids) — PNC 650089 ❑
- Stainless steel pressing/slicing disc with corrugated S-blades 1/8" (3 mm) (can be used for slicing or combined with grids) — PNC 650090 ❑
- Stainless steel pressing/slicing disc with corrugated S-blades 1/4" (6 mm) (can be used for slicing or combined with grids) — PNC 650091 ❑
- Lid and bowl scraper for 7.4 qts (7 L) cutter mixer — PNC 650104 ❑
- Cleaning tool for TRS, TRK & TR210 3/16-5/16-3/8 in (5-8-10 mm) dicing grids — PNC 650110 ❑
- Dicing set 10X10X10MM (10mm aluminum slicing pressing disc with 205mm diam. and 10mm grid) — PNC 650112 ❑
- Aluminum pressing/slicing disc with straight blades 10 mm - for dicing — PNC 650115 ❑
- Aluminum pressing/slicing disc with straight blades 8 mm - for dicing — PNC 650116 ❑
- Stainless steel shredding disc with S-blades 5/64" x 5/16" (2x8 mm) — PNC 650158 ❑
- Stainless steel shredding disc with S-blades 5/64" x 3/8" (2x10 mm) — PNC 650159 ❑
- Stainless steel pressing/slicing disc with corrugated S-blades 5/16" (8 mm) (can be used for slicing or combined with grids) — PNC 650162 ❑
- Stainless steel pressing/slicing disc with corrugated S-blades 3/8" (10 mm) (can be used for slicing or combined with grids) — PNC 650164 ❑
- Stainless steel shredding disc with S-blades 5/64"x 5/64" (2x2 mm) — PNC 650166 ❑
- Stainless steel shredding disc with S-blades 1x8" x 1/8" (3x3 mm) — PNC 650167 ❑
- Stainless steel work table assembly. — PNC 653283 ❑
- Dicing grid 3/16" x 3/16" (5x5 mm) — PNC 653566 ❑
- Dicing grid 5/16" x 5/16" (8x8 mm) — PNC 653567 ❑
- Dicing grid 3/8"x 3/18" (10x10 mm) — PNC 653568 ❑
- Dicing grid 15/32"x 15/32" (12x12 mm) — PNC 653569 ❑
- Dicing grid 25/32"x 25/32" (20x20 mm) — PNC 653570 ❑
- Grid for chips 1/4" x 1/4" (6x6 mm) — PNC 653571 ❑
- Grid for chips 5/16"x 5/16" (8x8 mm) — PNC 653572 ❑
- Grid for chips 3/8" x 3/8" (10x10 mm) — PNC 653573 ❑
- Stainless steel bowl for 7.4 qts (7 L) cutter mixer — PNC 653593 ❑
- Support for 1 disc, diam. 175mm and 205mm — PNC 653632 ❑
- Ejector disc — PNC 653772 ❑
- Stainless steel grating disc 5/64", fine (2mm) — PNC 653773 ❑
- Stainless steel grating disc, 1/8", fine (3mm) — PNC 653774 ❑
- Stainless steel grating disc 5/32 " (4mm) — PNC 653775 ❑
- Stainless steel grating disc 9/32 " (7mm) — PNC 653776 ❑
- Stainless steel grating disc 11/32 " (9mm) — PNC 653777 ❑
- Stainless steel grating disc, designed for nuts, chocolate & bread crumbs, stainless steel — PNC 653778 ❑
- Stainless steel grating disc, especially fine grating for Parmesan cheese and chocolate, stainless steel — PNC 653779 ❑
- Set of 3 discs, diam. 205 mm (5mm slicer, 4mm grater, 6mm julienne/ shredder) — PNC 653869 ❑
- Set of 5 discs, diam. 205 mm (4mm and 6mm slicer, 6mm julienne/ shredder, 5mm and 10 mm slicer, 10x10mm grid) — PNC 653870 ❑
- SMOOTH BLADE ROTOR - 7L CUTTER-MIXER — PNC 653881 ❑
- MICROTOOTHED BLADE ROTOR (EMULSIONS) - 7L CUTTER-MIXER — PNC 653882 ❑

Combined Cutter/Vegetable slicer
Combined vegetable slicer/cutter 7l/7.4qt, variab.speed-1500w, nema 5-15p

Front

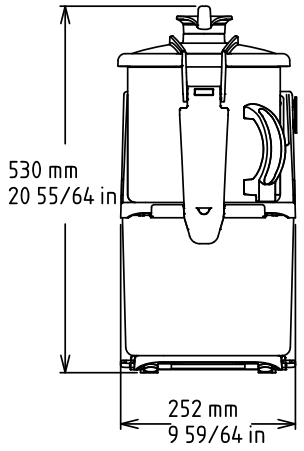

Side

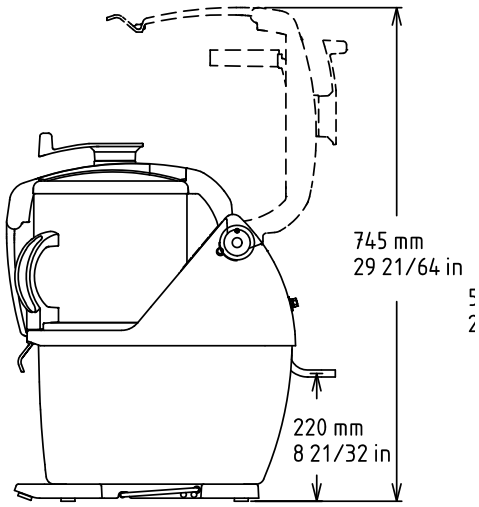

EI = Electrical connection

Top

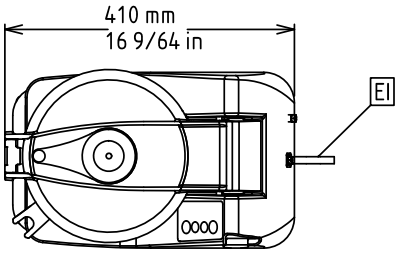

Electric

Supply voltage:	110-120 V/1N ph/60 Hz
Total Watts:	1.5 kW
Plug type:	USA NEMA 5-15P

Key Information:

External dimensions, Width:	9 15/16" (252 mm)
External dimensions, Depth:	19 1/16" (485 mm)
External dimensions, Height:	19 7/8" (505 mm)
Shipping width:	13 " (330 mm)
Shipping depth:	32 1/4" (820 mm)
Shipping height:	23 5/8" (600 mm)
Shipping weight:	71 lbs (32 kg)

The company reserves the right to make modifications to the products without prior notice. All information correct at time of printing.

2026.11.21